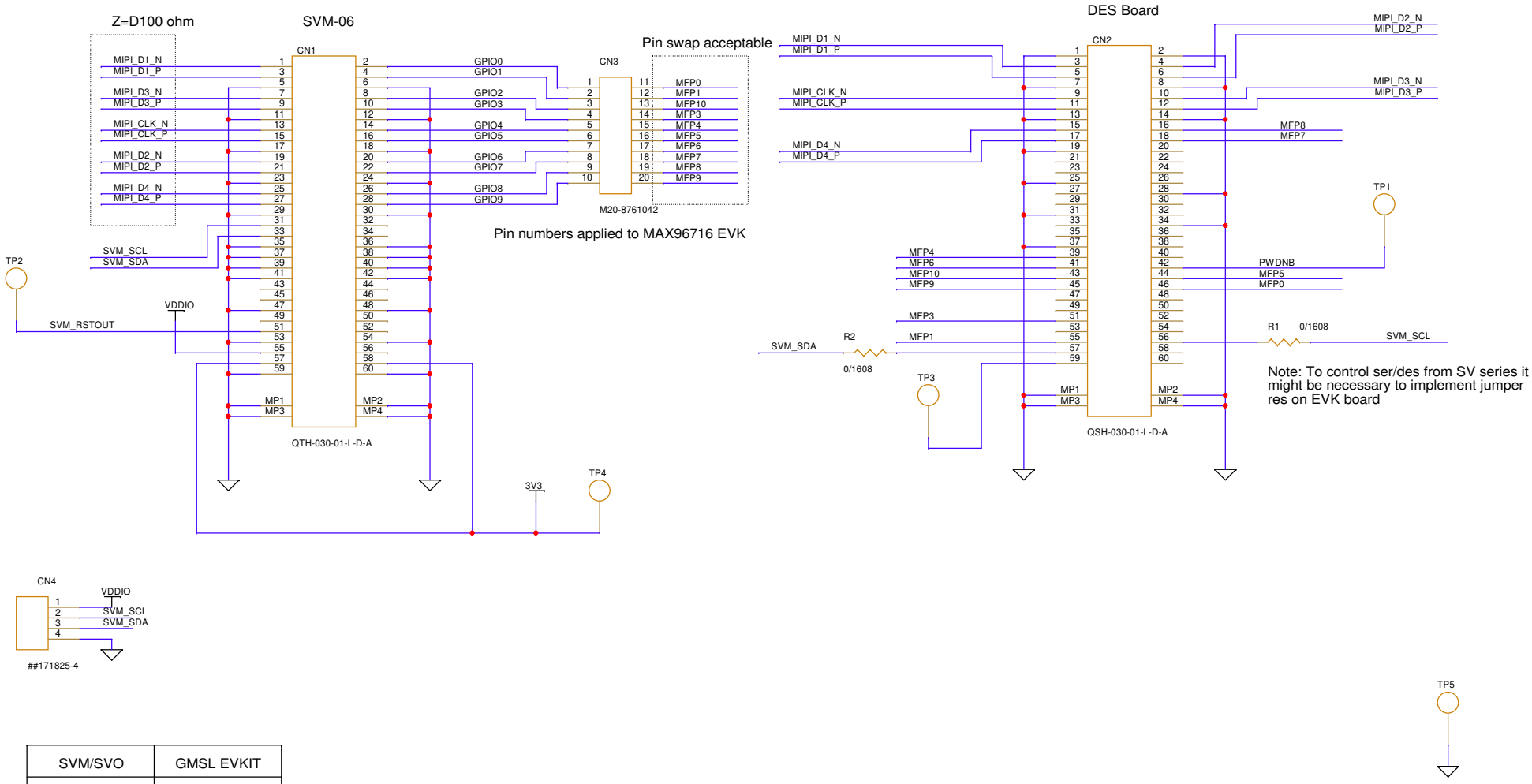


| SVM/SVO | GMSL EVKIT |
|---|---|
| MIPI_D1_N/P | D(A)0N/P |
| MIPI_D2_N/P | D(A)1N/P |
| MIPI_D3_N/P | D(A)2N/P |
| MIPI_D4_N/P | D(A)3N/P |
| CLK_N/P | CK(A)0N/P |

* Parts whose name starts with ## are not implemented
* TPn: Test Point (TH).

| | | |
|---|---|---|
| Title: NV061-Q (GMSL2 DES EVK - SV Series IF Board) | | |
| Size: B | Designer: Hiroyuki Yamada | Rev: A |
| Date: Thursday, August 24, 2023 | Sheet 1 of 1 | |